All in One Twin Bed with Twin Trundle and Drawers
Bedz King BK551

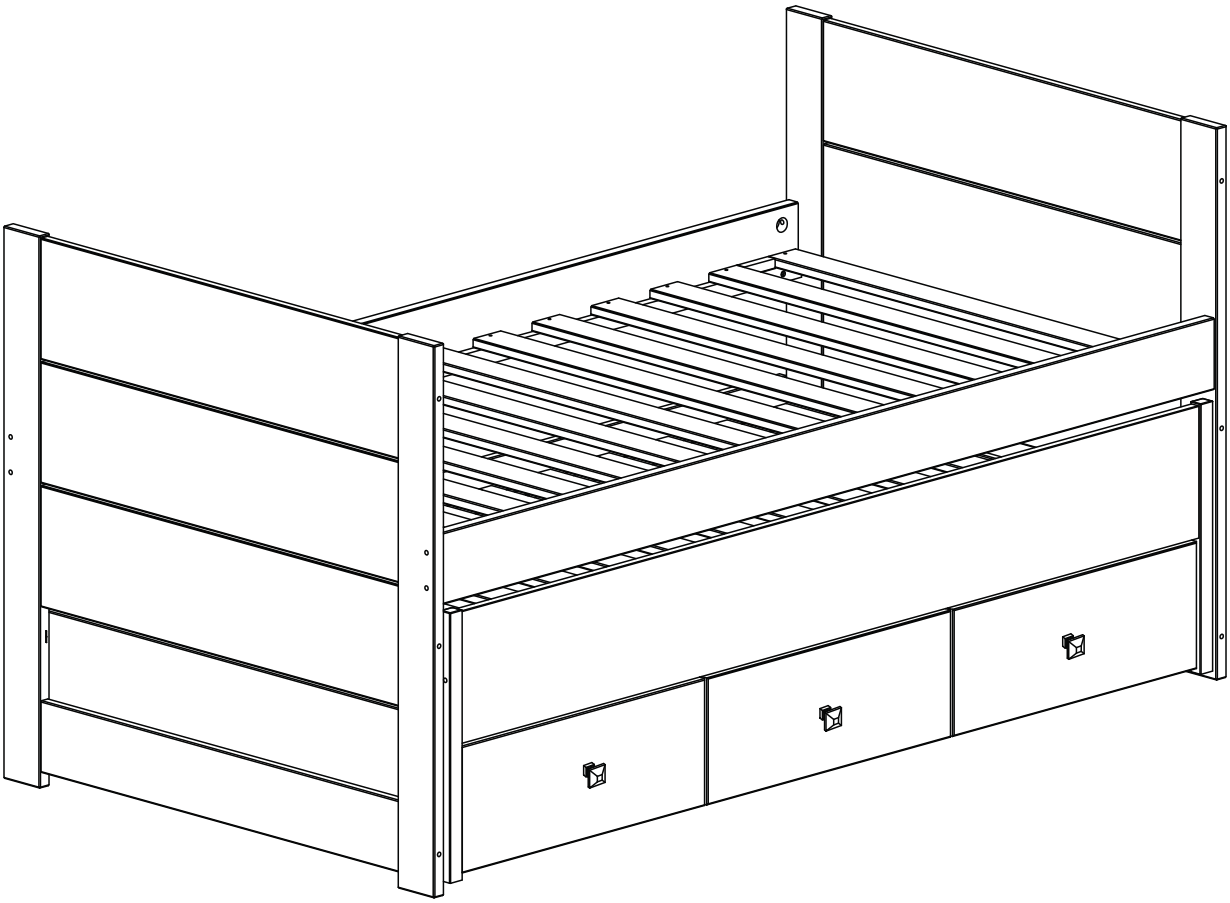

Thank you for purchasing your Furniture from Bedz King.

Every effort has been made to ensure your Furniture is of the finest quality. If you have any questions, please do Not Hesitate to contact us at info@bedzking.com

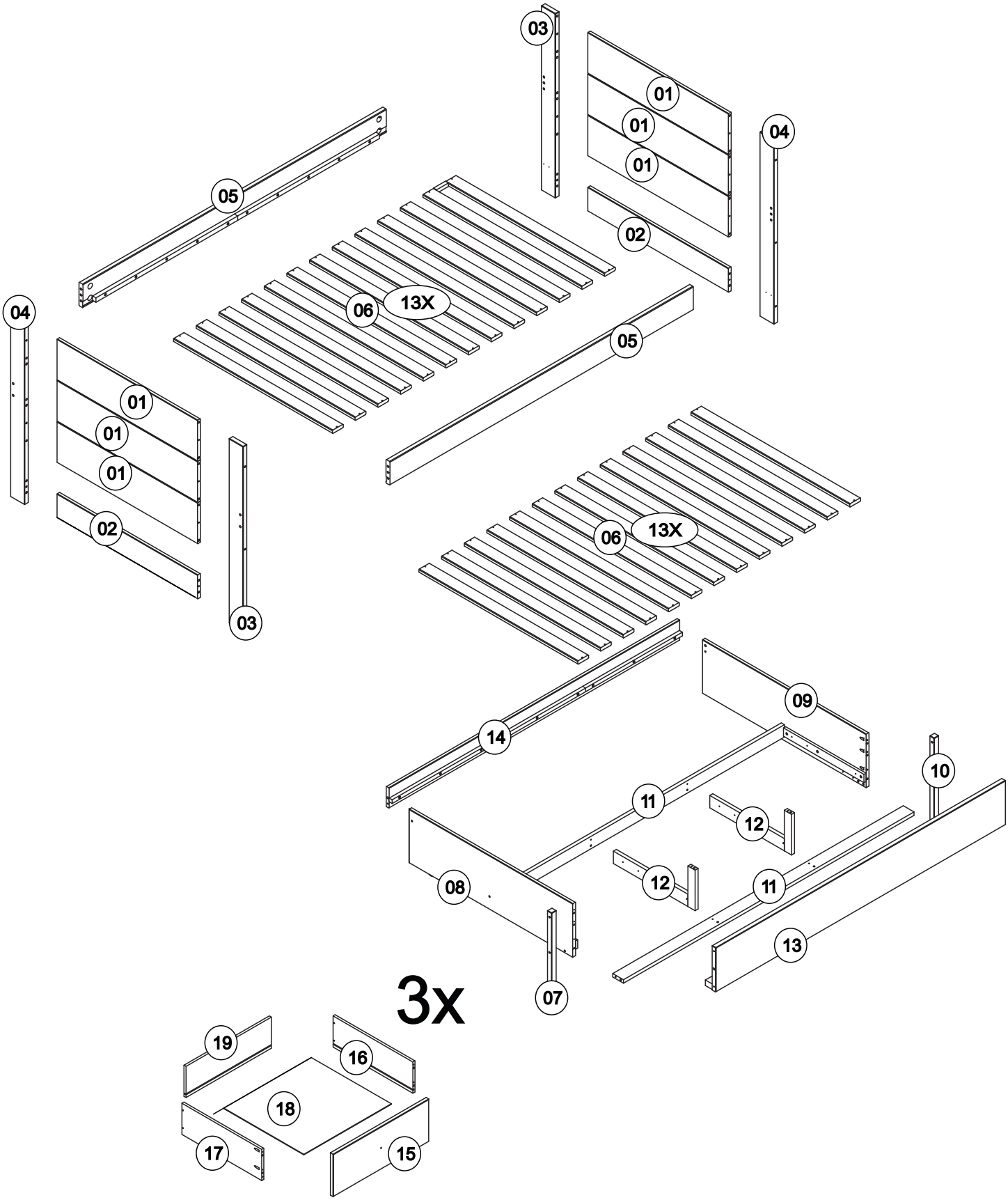
03
01
01
01
04
05
02
06
13X
05
04
01
01
01
02
03
06
13X
09
14
10
11
12
12
11
08
13
07
3x
19
16
18
17
15

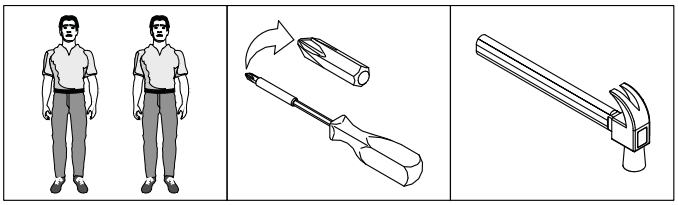

SCREWS ARE SHOWN IN ACTUAL SIZE		Qty.	Extra
A1	4x30	82	+2
A5	3,5x16	20	+2
A26	M4 x 25	03	
A16	4 x 40	04	
B5	1/4"	08	+2
B11	7x130	12	
B17	7 x 60	12	+2
B26	1/4" x 80	08	+2
B31	6,0x10	36	+2
C1	8x30	24	
C3		44	+2
D23		02	
E8		04	
E10		03	
E11		03	
G8		01	
H3		03	
J	SLAT SPACER	02	

WARNING:
CHOKING HAZARD - - Small Parts

Not for Children.
To be Assembled by an Adult.

1

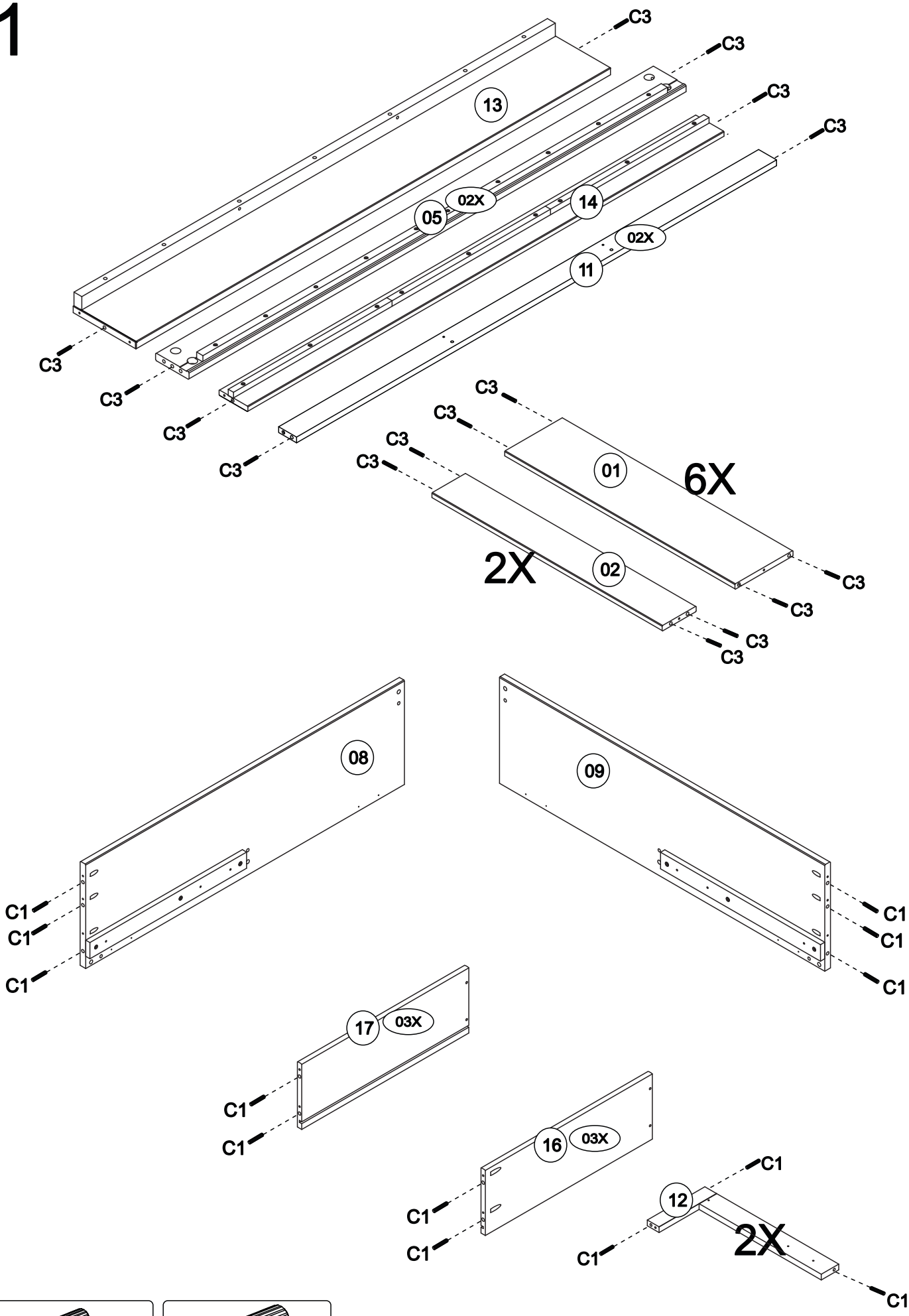

C1 - 24x

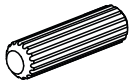

C3 - 44x

2

! 2X

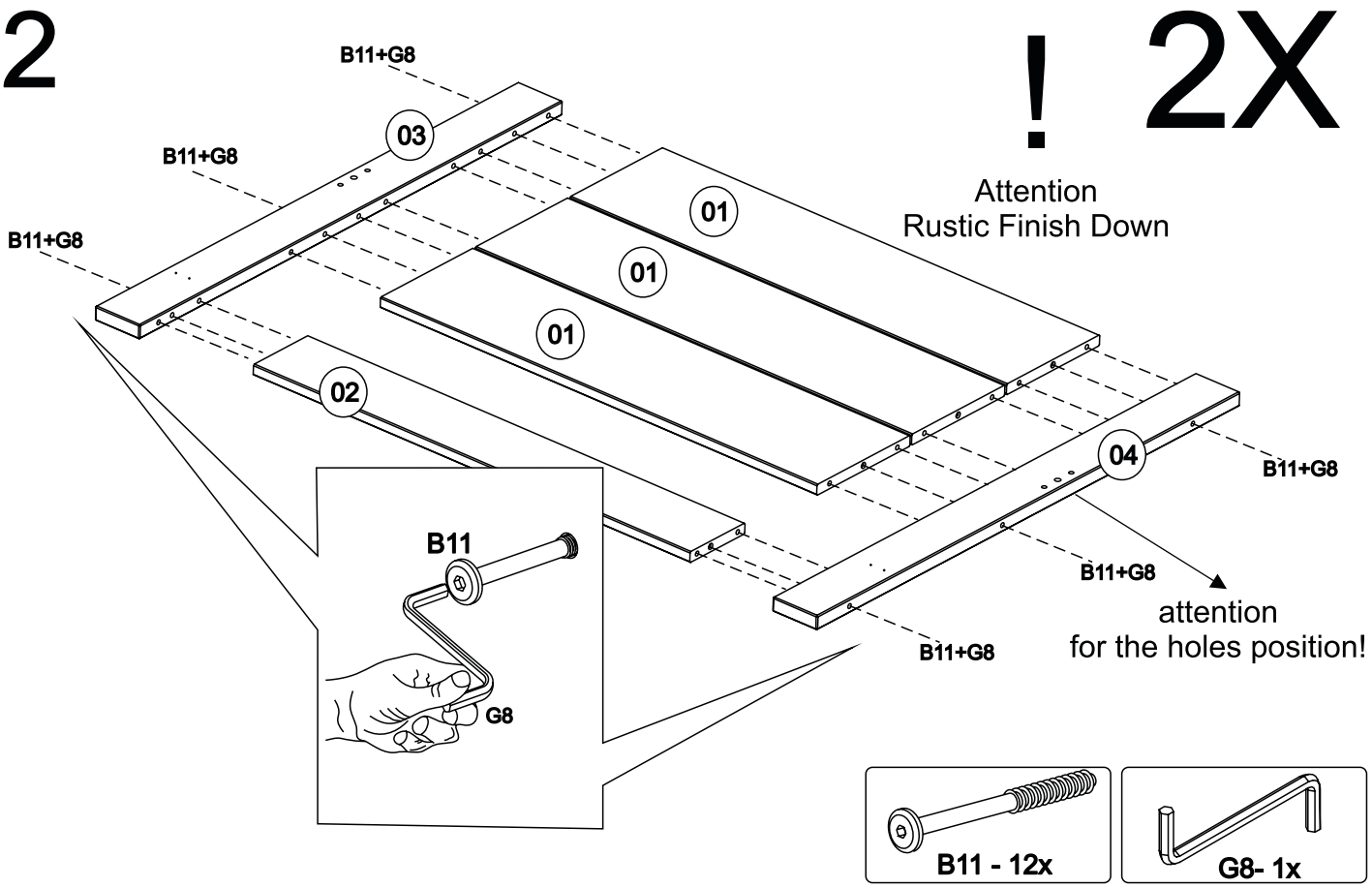

Attention
Rustic Finish Down

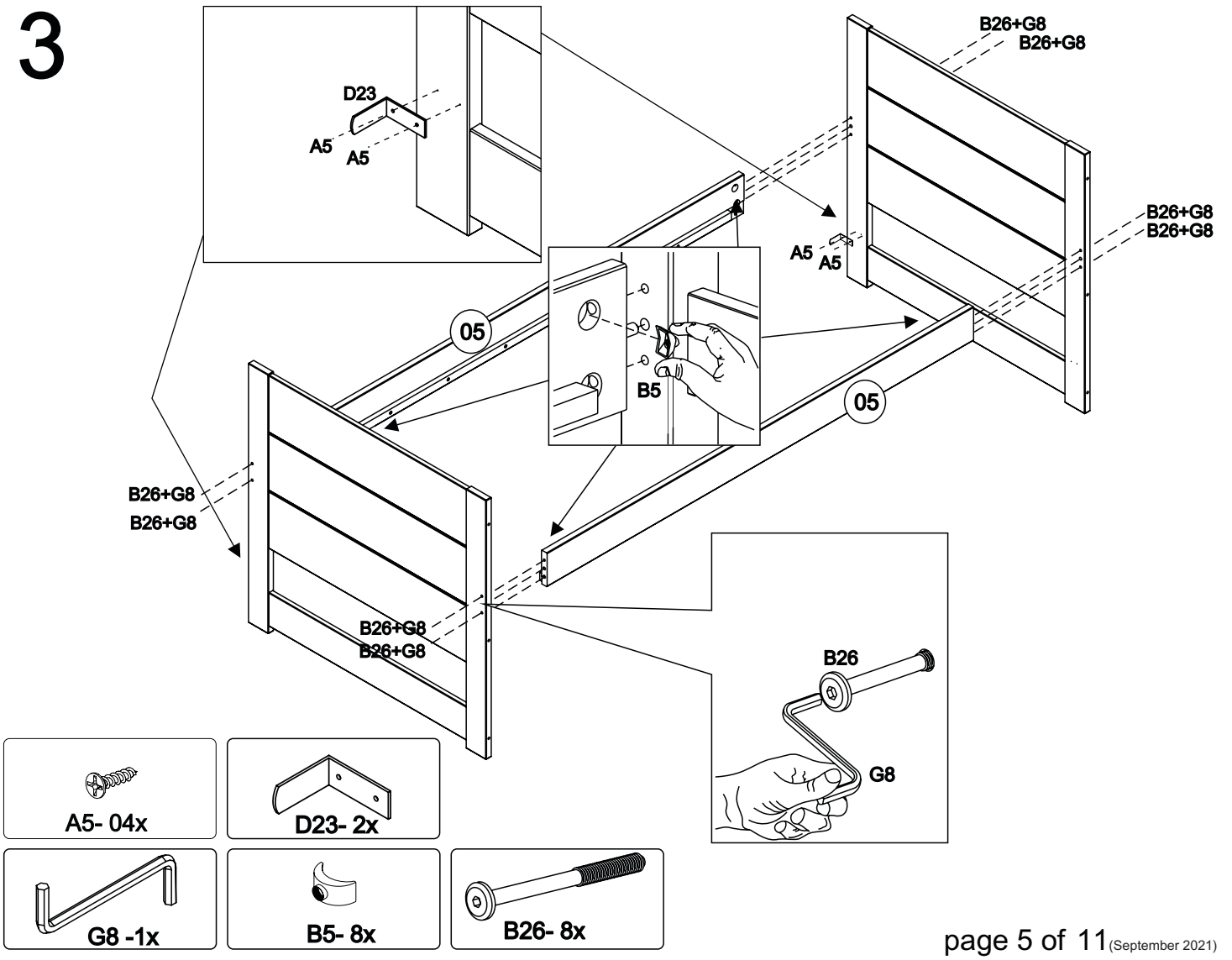

B11+G8
B11+G8
B11+G8
03
01
01
01
02
04
B11+G8
B11+G8
B11+G8
B11
G8

attention
for the holes position!

B11 - 12x

G8- 1x

3

D23
A5
A5
B26+G8
B26+G8
B26+G8
B26+G8
A5
A5
05
B5
05
B26+G8
B26+G8
B26+G8
B26+G8
B26
G8

A5- 04x

D23- 2x

G8 -1x

B5- 8x

B26- 8x

4

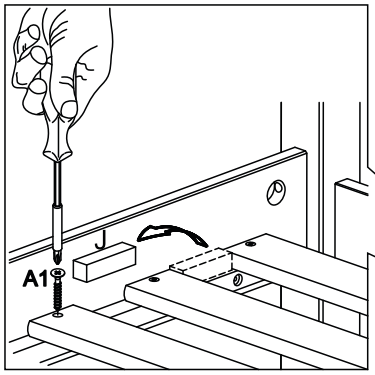
A1
J

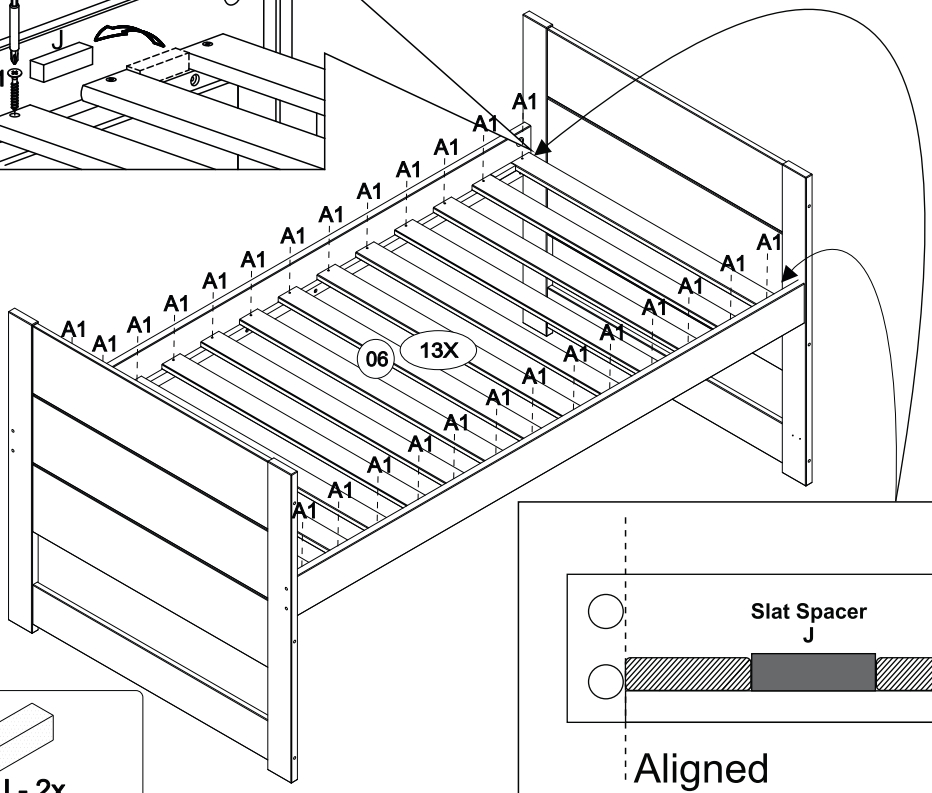
A1
06
13X

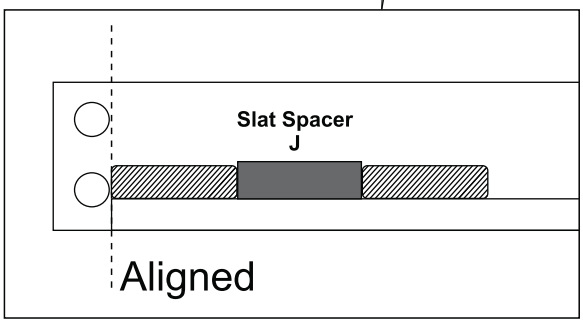
Slat Spacer
J
Aligned

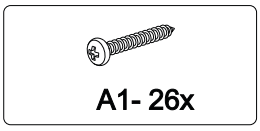
A1- 26x

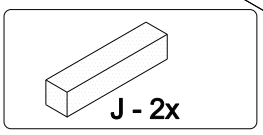
J - 2x

5

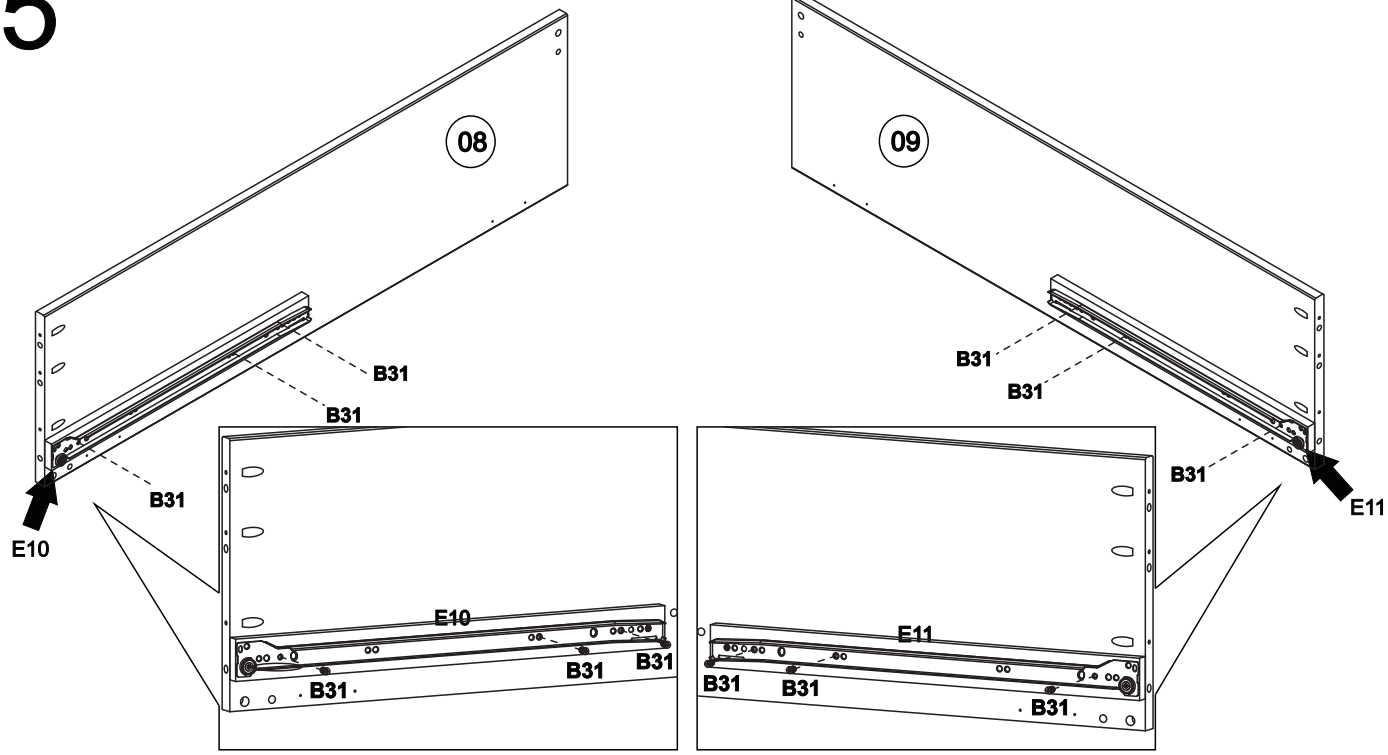
08
09
B31
E10
E11

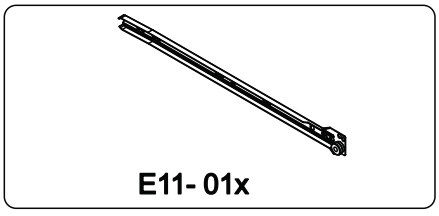
E11- 01x

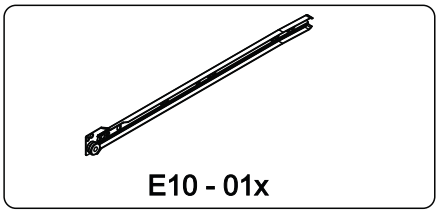
E10 - 01x

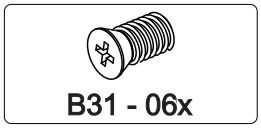
B31 - 06x

6

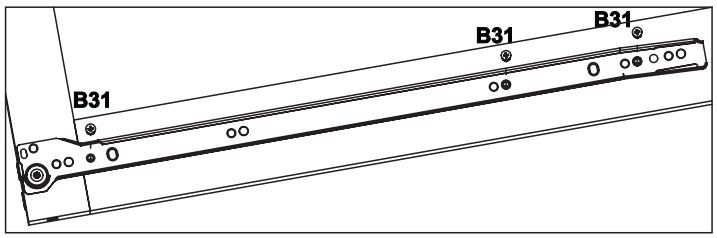

2X

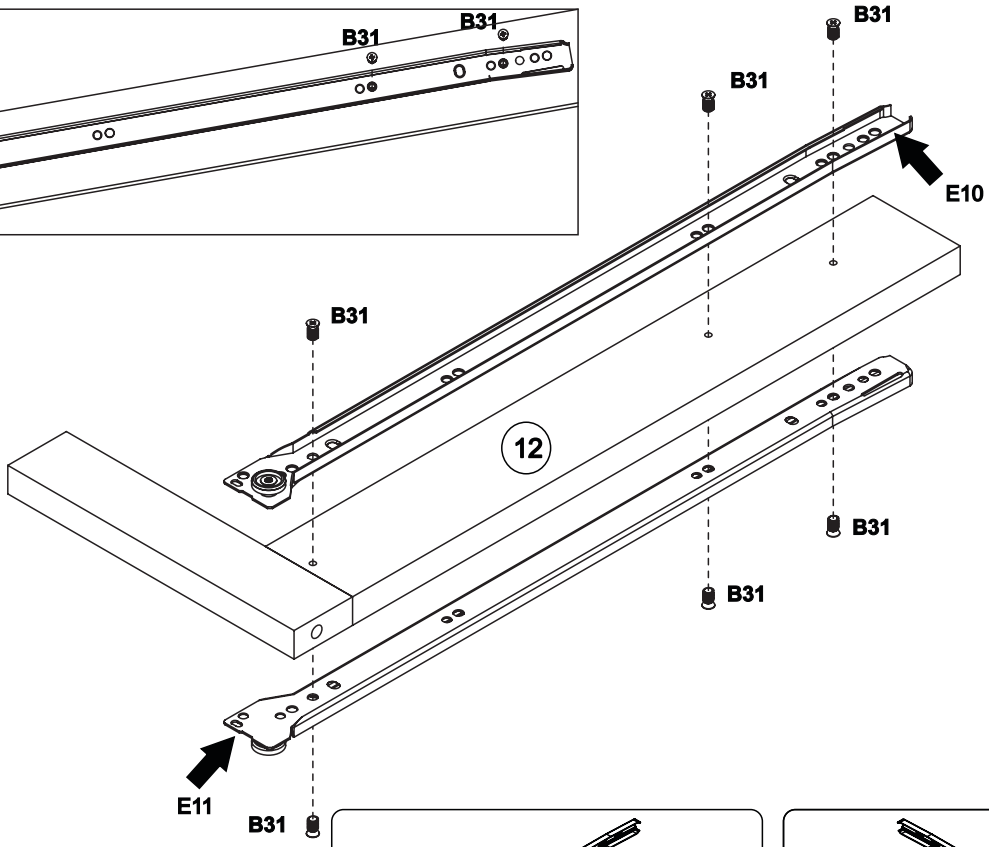

B31 - 12x

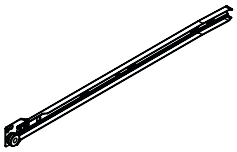

E10- 02x

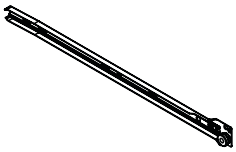

E11- 02x

7

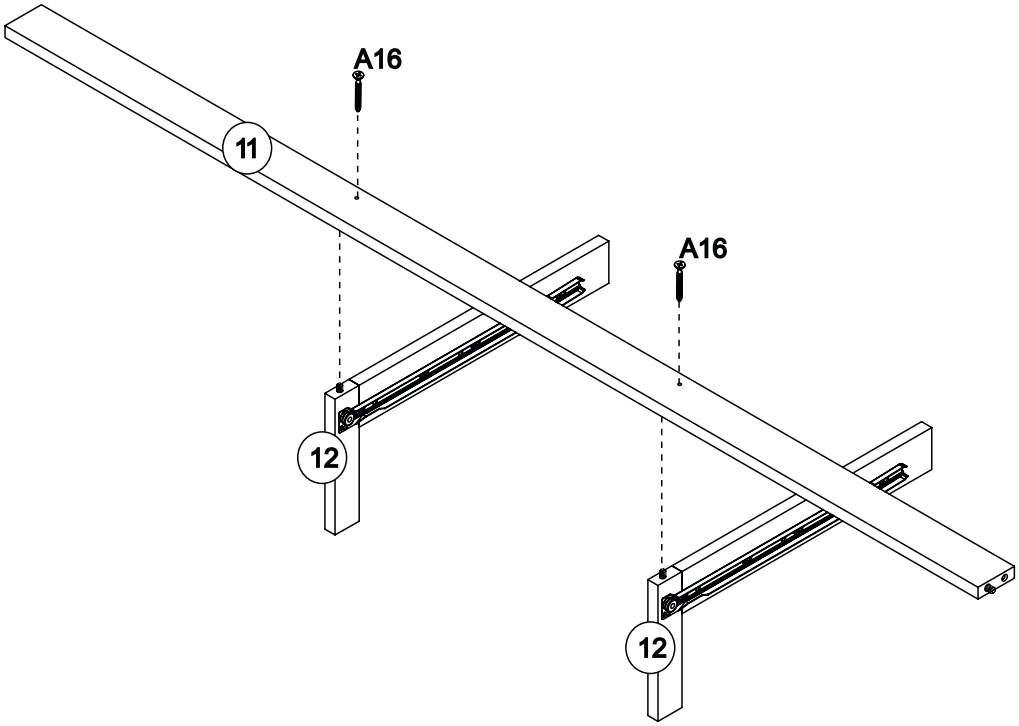

A16- 2x

8

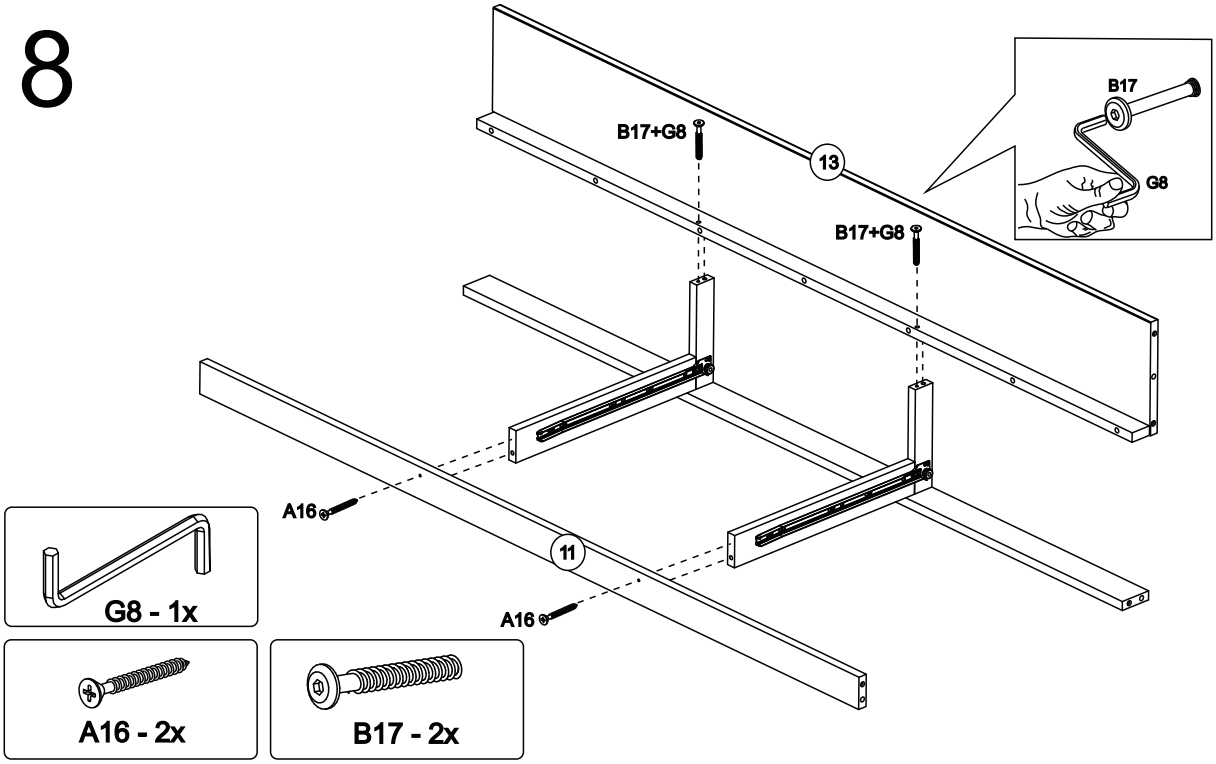
B17+G8
13
B17
G8
B17+G8
A16
11
A16
G8 - 1x
A16 - 2x
B17 - 2x

9

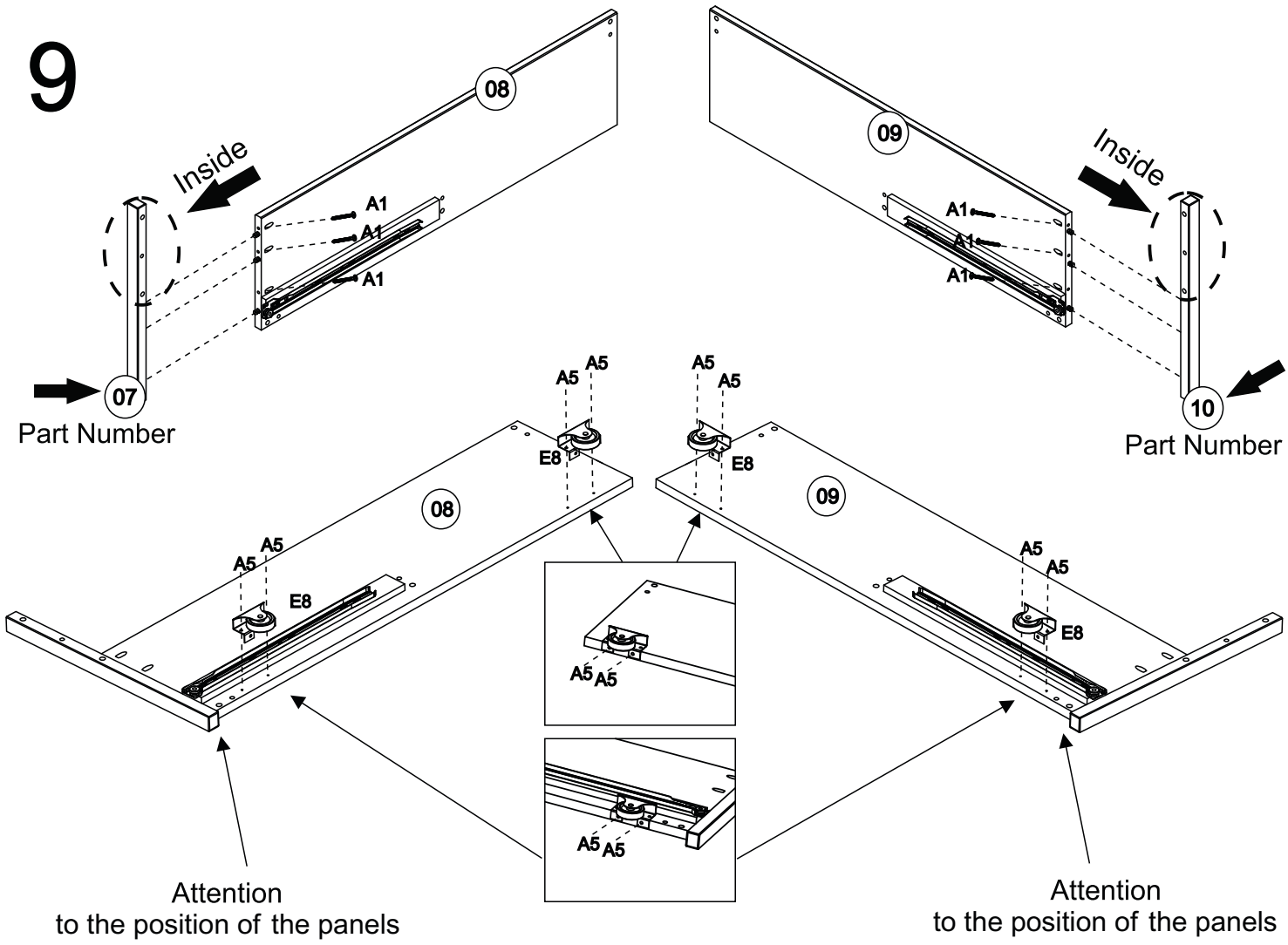
08
Inside
A1
A1
A1
07
Part Number
09
Inside
A1
A1
A1
10
Part Number
A5
A5
E8
08
A5
A5
E8
A5
A5
E8
09
A5
A5
E8
A5
A5
A5
A5
Attention
to the position of the panels
Attention
to the position of the panels

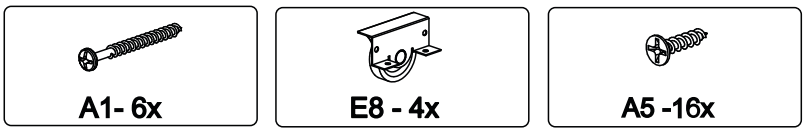
A1- 6x
E8 - 4x
A5 -16x

10

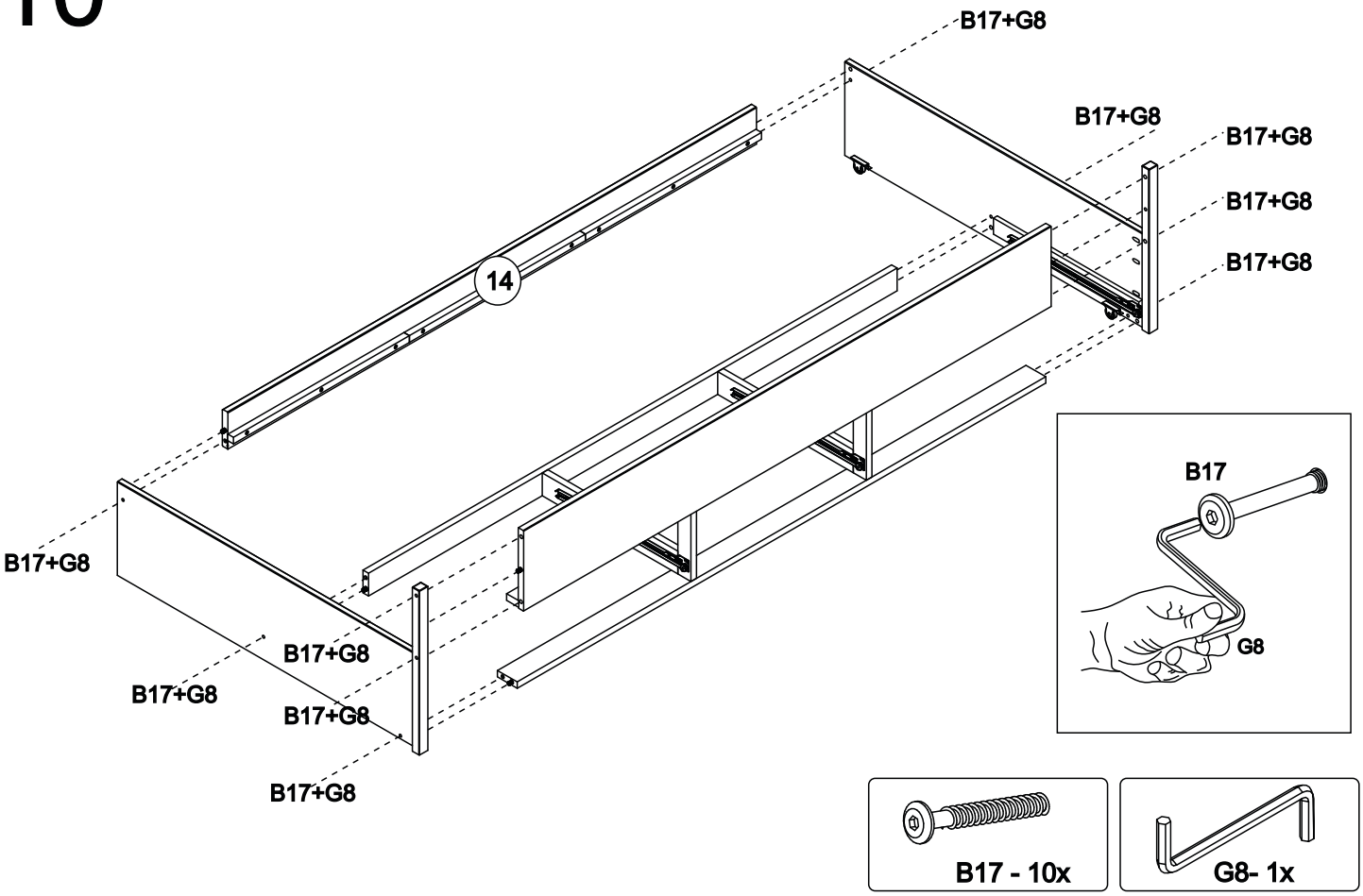
B17+G8
B17+G8
B17+G8
B17+G8
B17+G8
14
B17+G8
B17+G8
B17+G8
B17+G8
B17+G8
B17
G8
B17 - 10x
G8- 1x

11

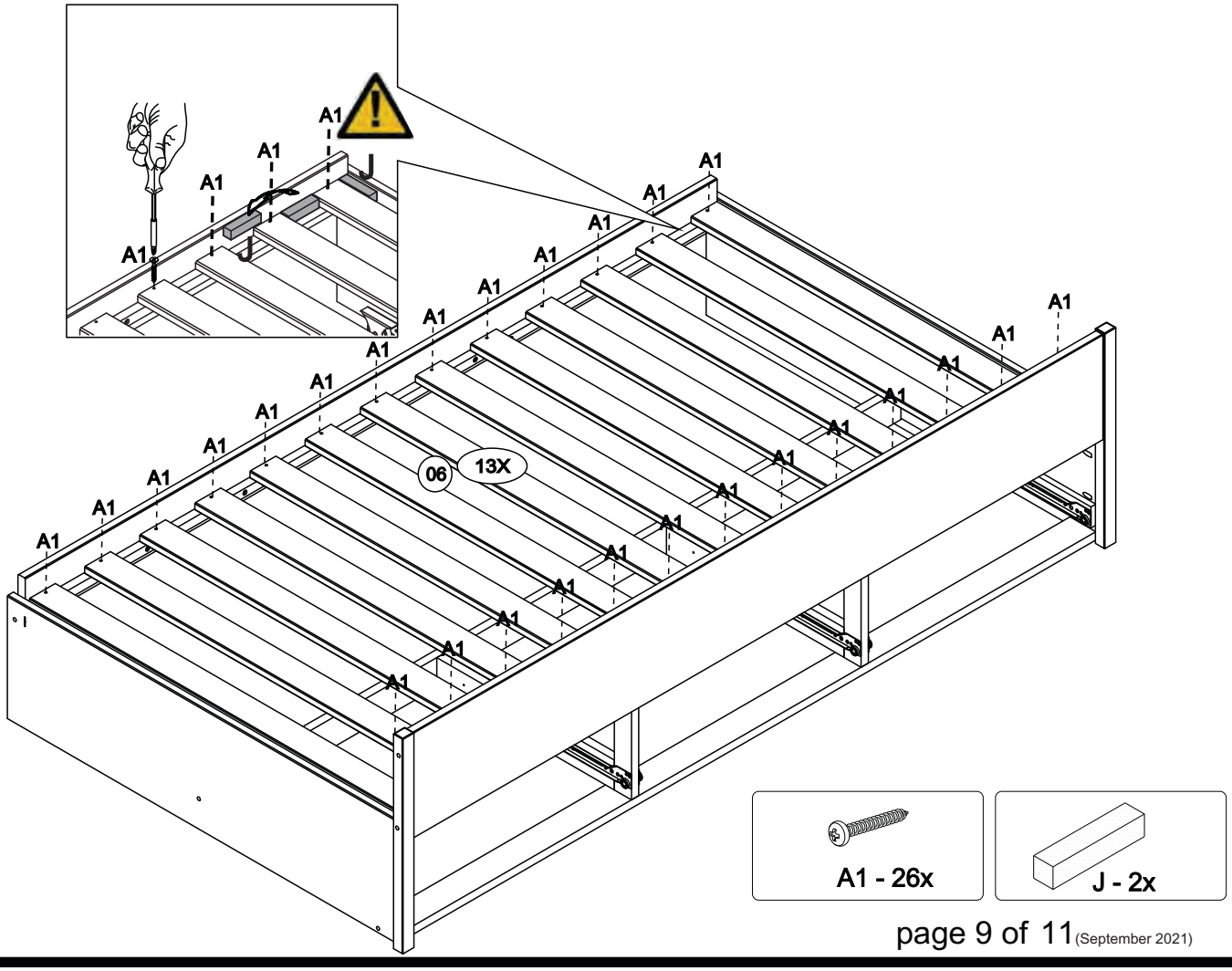
A1
J
06
13X
A1 - 26x
J - 2x

12

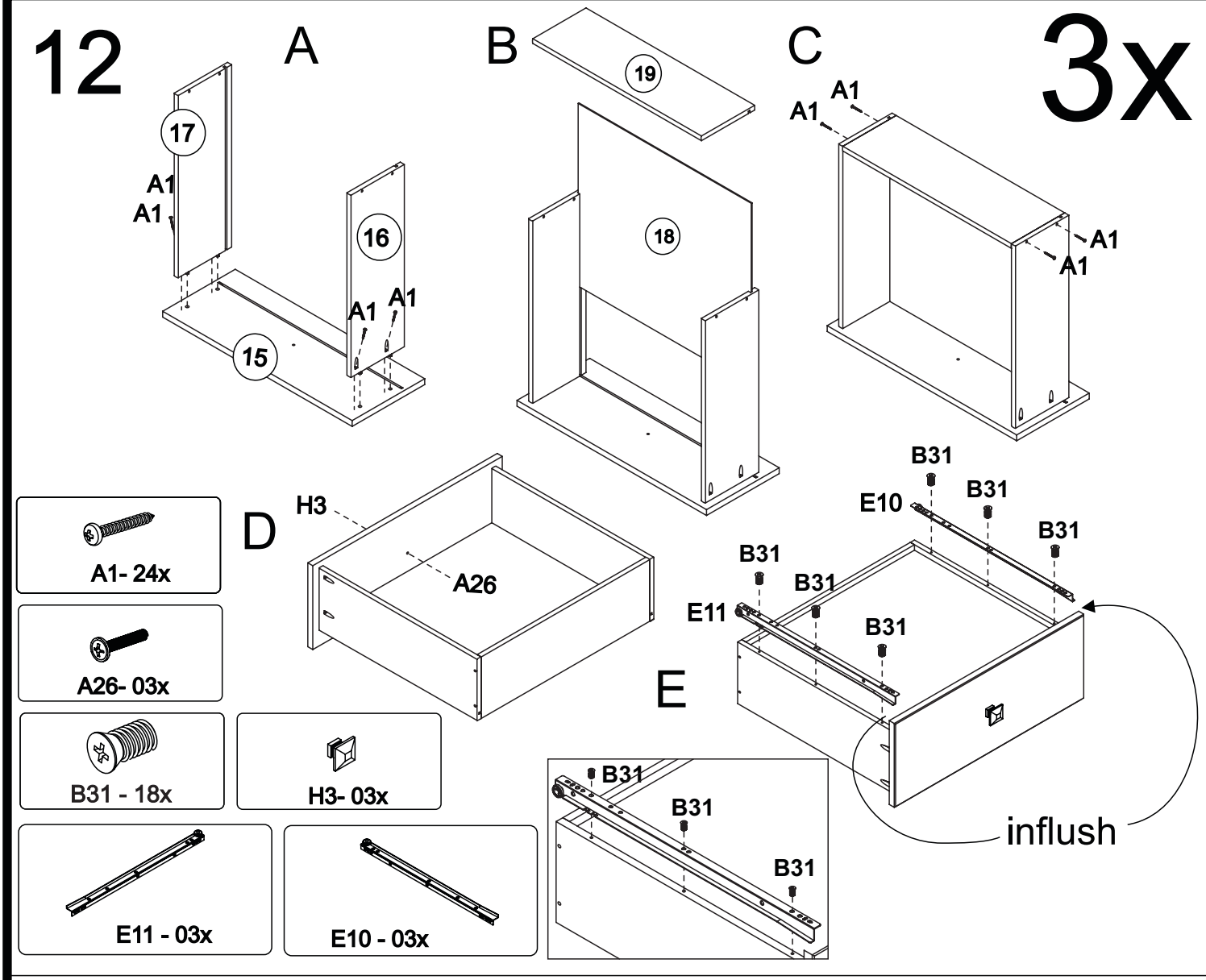
A
B
C
3x
17
16
15
18
19
A1
A1
A1
A1
A1
A1
A1
A1
D
H3
A26
E
B31
E10
B31
B31
B31
B31
E11
B31
B31
B31
B31
inflush
A1- 24x
A26- 03x
B31 - 18x
H3- 03x
E11 - 03x
E10 - 03x

13

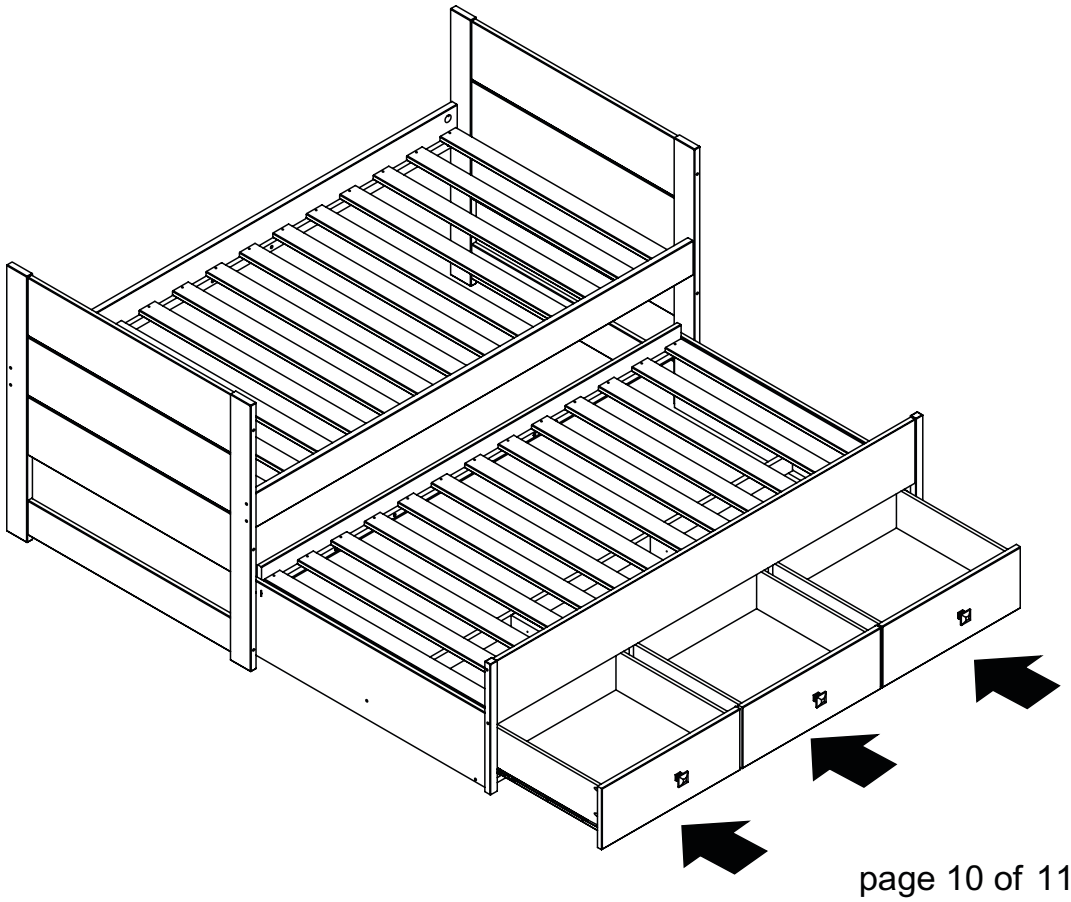

BEDDING SPECIFICATION

- Always use the recommended size mattress or mattress support or both, to help prevent the likelihood of entrapment or falls.
- All Bedz King beds are supplied with a complete slat kit, so there is no need for a foundation or bunkie board.

BED MATTRESS SPECIFICATIONS

Twin Bed
Only use a mattress that is 74" - 75" long and 37 1/2" - 38 1/2" wide.

REPLACEMENT PARTS

- Replacement parts may be obtained by contacting
Bedz King LLC atinfo@bedzking.com

ASSEMBLYTIPS

- Power tools are not recommended for assembling your furniture.
- Give yourself plenty of room to work.
- It must be assembled within the space it will occupy.
- The assembly will require at least two people to complete.
- Make sure all the fasteners are tight.
- Take your time and read the instructions carefully.