JACKPOT! Twin Bed

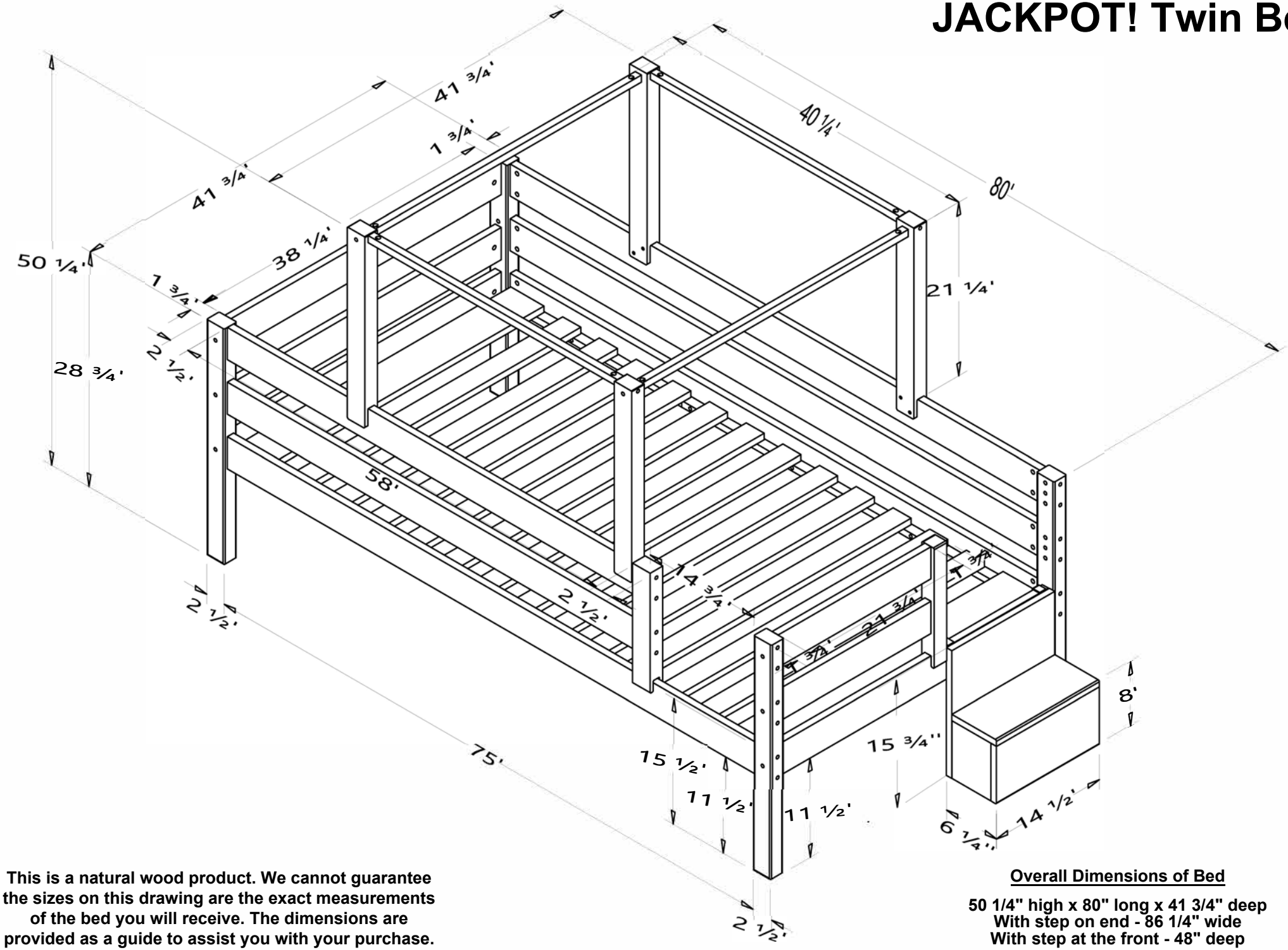

This is a natural wood product. We cannot guarantee the sizes on this drawing are the exact measurements of the bed you will receive. The dimensions are provided as a guide to assist you with your purchase. Please ensure the bed will fit your room.

<u>Overall Dimensions of Bed</u>

50 1/4" high x 80" long x 41 3/4" deep
With step on end - 86 1/4" wide
With step at the front - 48" deep